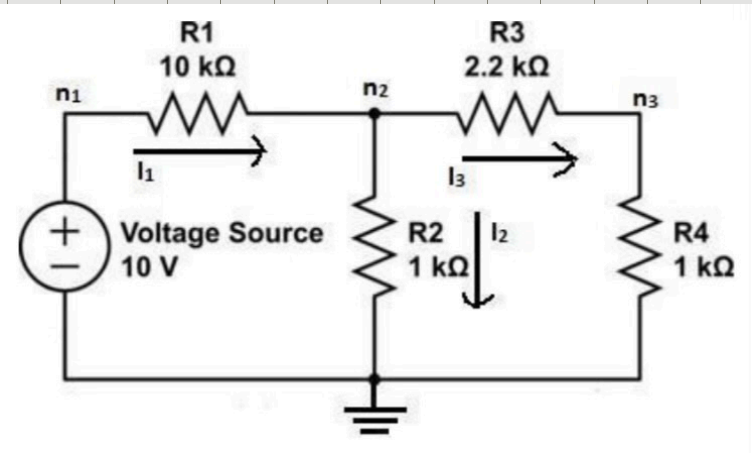

$$V_2 = V_3 + V_4$$

$$V_2 = I_3 R_3 + V_4$$

$$V_4 = V_2 - V_3$$

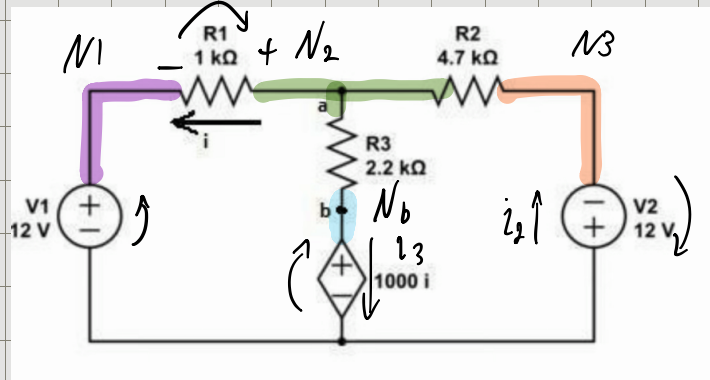

Figure 3.2

$N_2: \quad i + i_3 = i_2 \Rightarrow i = i_2 - i_3$

$N_3: \quad -12V = n_3 = V_2$

$N_1: \quad 12V = n_1 = V_1$

$N_4: \quad (1k\Omega)\, i =$

1) define i

$$i = \frac{V_a - V_1}{R_1} = \frac{V_a - 12}{1000} =$$

$$V_b = 1000\, i = 1000\left(\frac{V_a - 12}{1000}\right) = V_a - 12$$

2) KCL

$$\frac{V_a - 12}{1000} + \frac{V_a - (-12)}{4700} + \frac{V_a - V_b}{2200} = 0$$

$V_b = V_a - 12 \Rightarrow$

$$\frac{V_a - 12}{1000} + \frac{V_a + 12}{4700} + \frac{12}{2200} = 0$$

$$\frac{V_a}{1000} - \frac{12}{1000} + \frac{V_a}{4700} + \frac{12}{4700} + \frac{12}{2200} = 0$$

$$V_a\left(\frac{1}{1000} + \frac{1}{4700}\right) = \frac{12}{1000} - \frac{12}{4700} - \frac{12}{2200}$$

$$V_a = 3.292\ V$$

A) $i = \dfrac{3.292 - 12}{1000} = -8.708\ mA$

B) $V_{ab} = V_a - V_b = 12V$